Split 1

**Dart Aerospace Ltd.**

Date: Friday, 11/18/2005 3:15:48 PM
User: Linda Lacelle

# Process Sheet

| | | | |
|---|---|---|---|
| **Customer** | : CU-DAR001 Dart Helicopters Services | **Drawing Name** | : AFT TUBE ASSEMBLY |
| **Job Number** | : 24867 | | |
| **Estimate Number** | : 10699 | | |
| **P.O. Number** | : N/A | **Part Number** | : D3391025 |
| **This Issue** | : 11/18/2005 **S.O. No.** : N/A | **Drawing Number** | : D3391 REV B |
| **Prsht Rev.** | : NC | **Project Number** | : N/A |
| **First Issue** | : N/A **Type** : LANDING GEAR | **Drawing Revision** | : B |
| **Previous Run** | : N/A | **Material** | : N/A |
| **Written By** | : RST REVC 05.09.27 RF | **Due Date** | : 12/20/2005 **Qty:** 5 **Um:** Each |
| **Checked & Approved By** | : SEE ABOVE USER & DATE | | |
| **Comment** | : Est. 19 QC3 Inspect Powder Coat | | |

**Additional Product**

Job Number:

| Seq. #: | Machine Or Operation: | Description : |
|---|---|---|
| 1.0 | D6014090 | ALUMINUM EXTRUSION |

**Comment:** Qty.: 1.0000 f(s)/Unit Total : 5.0000 f(s)
ALUMINUM EXTRUSION
Pick:

| Qty | Part Number | Description | Batch |
|---|---|---|---|
| 1 | D6014-090 | Extrusion | B 24315 |

Identify as D3391-3

J. G 05/11/24 5

| Seq. #: | Machine Or Operation: | Description : |
|---|---|---|
| 2.0 | MORI SEIKI | MORI SEIKI CNC LATHE LARGE |

**Comment:** MORI SEIKI CNC LATHE LARGE
Turn as per Folio FA Rev: C & Dwg D3391 Rev: N/A

J. G 05/11/30 5

| Seq. #: | Machine Or Operation: | Description : |
|---|---|---|
| 3.0 | QC2 | INSPECT PARTS AS THEY COME OFF MACHINE |

**Comment:** INSPECT PARTS AS THEY COME OFF MACHINE

J. G 05/11/30 5

| Seq. #: | Machine Or Operation: | Description : |
|---|---|---|
| 4.0 | BAND SAW HAAS | BAND SAW |

**Comment:** BAND SAW HAAS
Machine as per Folio FA Rev: AA & Dwg D3391 Rev: C
Drill aft cap holes per Dwg D3391 using DT8803
Deburr

BG 05.12.04 5

| Seq. #: | Machine Or Operation: | Description : |
|---|---|---|
| 5.0 | QC2 | INSPECT PARTS AS THEY COME OFF MACHINE |

**Comment:** INSPECT PARTS AS THEY COME OFF MACHINE

BG 05.12.04 5



Form: rprocess

Dart Aerospace Ltd

| W/O: | | WORK ORDER CHANGES | | | | | |
|---|---|---|---|---|---|---|---|
| DATE | STEP | PROCEDURE CHANGE | By | Date | Qty | Approval Chief Eng / Prod Mgr | Approval QC Inspector |
| | | | | | | | |
| | | | | | | | |

Part No: _____ PAR #: _____ Fault Category: _____ NCR: Yes No DQA: _____ Date: _____

QA: N/C Closed: _____ Date: _____

| NCR: | | WORK ORDER NON-CONFORMANCE (NCR) | | | | | | |
|---|---|---|---|---|---|---|---|---|
| DATE | STEP | Description of NC Section A | Corrective Action Section B | | | Verification Section C | Approval Chief Eng | Approval QC Inspector |
| | | | Initial Chief Eng | Action Description Chief Eng | Sign & Date | | | |
| | | | | | | | | |
| | | | | | | | | |
| | | | | | | | | |

**NOTE:** Date & initial all entries

Date: Friday, 11/18/2005 3:15:48 PM
User: Linda Lacelle

# Process Sheet

**Customer:** CU-DAR001 Dart Helicopters Services **Drawing Name:** AFT TUBE ASSEMBLY

**Job Number:** 24867 **Part Number:** D3391025

Job Number:

| Seq. #: | Machine Or Operation: | Description : |
|---|---|---|
| 6.0 | QC8 | SECOND CHECK |
| | **Comment:** SECOND CHECK J.G 05/12/05 5 Split | |
| 7.0 | BRAKE NC | NC BRAKE |
| | **Comment:** NC BRAKE<br>Form as per Dwg D3391 NP 05-12-30 (2) | |
| 8.0 | QC5 | INSPECT WORK TO CURRENT STEP |
| | **Comment:** INSPECT WORK TO CURRENT STEP 06.01.07 (2) | |
| 9.0 | LANDING GEAR 1 | LANDING GEAR RESOURCE 1 |
| | **Comment:** LANDING GEAR RESOURCE 1<br>Drill and c' sink wearshoe holes as per Dwg D3391 NP 06-1-7 (2)<br>C'sink holes for float bag (4 holes per side) as per Dwg D3391 NP 06-1-7 (2)<br>Deburr | |
| 10.0 | QC5 | INSPECT WORK TO CURRENT STEP |
| | **Comment:** INSPECT WORK TO CURRENT STEP 06.01.07 (2) | |
| 11.0 | HAND FINISHING1 | HAND FINISHING RESOURCE #1 |
| | **Comment:** HAND FINISHING RESOURCE #1<br>Acid etch and Alodine as per QSI 005 4.1 NP 06-1-7 (2) a.m 06-1-7 (2) (2) (10) | |
| 12.0 | AESS10KB366 | Inventory |
| | **Comment:** Qty.: 14.0000 Each(s)/Unit Total : 70.0000 Each(s)<br>Insert<br>Pick:<br>Qty Part Number Description Batch<br>14 AESS10KB366 Insert m17905 TC 06 04 05 (1) | |
| 13.0 | NAS1330C3KB166 | Rivnut |
| | **Comment:** Qty.: 8.0000 Each(s)/Unit Total : 40.0000 Each(s)<br>Rivnut<br>Pick: | |



Form: rprocess

Dart Aerospace Ltd

| W/O: | | WORK ORDER CHANGES | | | | | |
|---|---|---|---|---|---|---|---|
| DATE | STEP | PROCEDURE CHANGE | By | Date | Qty | Approval Chief Eng / Prod Mgr | Approval QC Inspector |
| 06-04-05 | 11.1 | Powder coat as per QS1 005 (ref 4B.5.1.) | | | | | 06-04-05 |
| | | | | | | | |

Part No: _____ PAR #: _____ Fault Category: _____ NCR: Yes (No) DQA: [illegible] Date: 06/04/12

QA: N/C Closed: _____ Date: _____

| NCR: | | WORK ORDER NON-CONFORMANCE (NCR) | | | | | | |
|---|---|---|---|---|---|---|---|---|
| DATE | STEP | Description of NC Section A | Corrective Action Section B | | | Verification Section C | Approval Chief Eng | Approval QC Inspector |
| | | | Initial Chief Eng | Action Description Chief Eng | Sign & Date | | | |
| | | | | | | | | |
| | | | | | | | | |
| | | | | | | | | |

NOTE: Date & initial all entries

Date: Friday, 11/18/2005 3:15:48 PM
User: Linda Lacelle

# Process Sheet

**Customer:** CU-DAR001 Dart Helicopters Services

**Drawing Name:** AFT TUBE ASSEMBLY

**Job Number:** 24867

**Part Number:** D3391025

Job Number:

**Seq. #:** **Machine Or Operation:** **Description :**

| Qty | Part Number | Description | Batch |
|---|---|---|---|
| 8 | NAS1330C3KB166 | Insert | M18308 |

FC 06 04 05 (1)

14.0 QC5 INSPECT WORK TO CURRENT STEP

**Comment:** INSPECT WORK TO CURRENT STEP

M 06 04 05 (1)

15.0 PACKAGING 1 PACKAGING RESOURCE #1

**Comment:** PACKAGING RESOURCE #1
Identify and Stock
Location:_____

N/A

16.0 DC DOCUMENT CONTROL

**Comment:** DOCUMENT CONTROL
Inspection Level 21

(1) 06/04/05

Job Completion



Form: rprocess

Dart Aerospace Ltd

| W/O: | | WORK ORDER CHANGES | | | | | |
|---|---|---|---|---|---|---|---|
| DATE | STEP | PROCEDURE CHANGE | By | Date | Qty | Approval Chief Eng / Prod Mgr | Approval QC Inspector |
| | | | | | | | |
| | | | | | | | |

**Part No:** _____ **PAR #:** _____ **Fault Category:** _____ **NCR:** Yes No **DQA:** _____ **Date:** _____

**QA: N/C Closed:** _____ **Date:** _____

| NCR: | | WORK ORDER NON-CONFORMANCE (NCR) | | | | | | |
|---|---|---|---|---|---|---|---|---|
| DATE | STEP | Description of NC Section A | Corrective Action Section B | | | Verification Section C | Approval Chief Eng | Approval QC Inspector |
| | | | Initial Chief Eng | Action Description Chief Eng | Sign & Date | | | |
| | | | | | | | | |
| | | | | | | | | |
| | | | | | | | | |

**NOTE:** Date & initial all entries

□□□□□□□□

Job Costing Report

Dart Aerospace Ltd.
Hawkesbury

Nov 17, 2005
03:30 pm

| | | | |
|---|---|---|---|
| Work Order No | : 0024867 | | |
| Project Name | : D3391-025 | Department Code: | |
| Project For | : WK550 | Burden Flags | : NNNNNNN |
| Work Order Type | : Main | WO Status | : Open |
| Main WO Number | : | Invoice State | : Not Invoiced |
| House Part Number | : D3391-025 | Invoice Date | : |
| Description | : Aft Tube Assembly | Invoice Number | : |
| Manufactured | : Yes | Invoice Amount | : 0.00 |
| Amount Req'd | : 5 | | |
| Amount Done | : 0 | Order Entry No | : |
| Start Date | : 11-17-05 | OE Value | : 0.00 |
| Est Finish Date | : 12-20-05 | | |
| Act Finish Date | : | Est Margin | : 0.000% |
| Drawings Reqd | : No | Actual Margin | : 0.000% |
| Ok for Approval | : | | |
| Approval Rec'd | : | $0 Posted to Finished Goods | |

| | Estimated | Actual | Var. % | Posted | To Post |
|---|---|---|---|---|---|
| Material Cost : | 0.00 | 0.00 | 0.00 | 0.00 | 0.00 |
| Engineering Hours : | 0.00 | 0.00 | 0.00 | | |
| Engineering Cost : | 0.00 | 0.00 | 0.00 | 0.00 | 0.00 |
| Production Hours : | 0.00 | 0.00 | 0.00 | | |
| Production Cost : | 0.00 | 0.00 | 0.00 | 0.00 | 0.00 |
| Packaging Hours : | 0.00 | 0.00 | 0.00 | | |
| Packaging Cost : | 0.00 | 0.00 | 0.00 | 0.00 | 0.00 |
| OverHead Hours : | 0.00 | 0.00 | 0.00 | | |
| OverHead Cost : | 0.00 | 0.00 | 0.00 | 0.00 | 0.00 |
| CNC Hours : | 0.00 | 0.00 | 0.00 | | |
| CNC : | 0.00 | 0.00 | 0.00 | 0.00 | 0.00 |
| Misc. Hours : | 0.00 | 0.00 | 0.00 | | |
| Misc. : | 0.00 | 0.00 | 0.00 | 0.00 | 0.00 |
| Burden : | 0.00 | 0.00 | 0.00 | | |
| Total Cost : | 0.00 | 0.00 | 0.00 | | |
| Margin : | 0.000 | 0.000 | | | |
| Selling Cost : | 0.00 | 0.00 | | | |

| | Estimated | Actual |
|---|---|---|
| Labour Hrs/Amount Done : | 0.00 | 0.00 |
| Profits/(Loss) : | 0.00 | 0.00 |

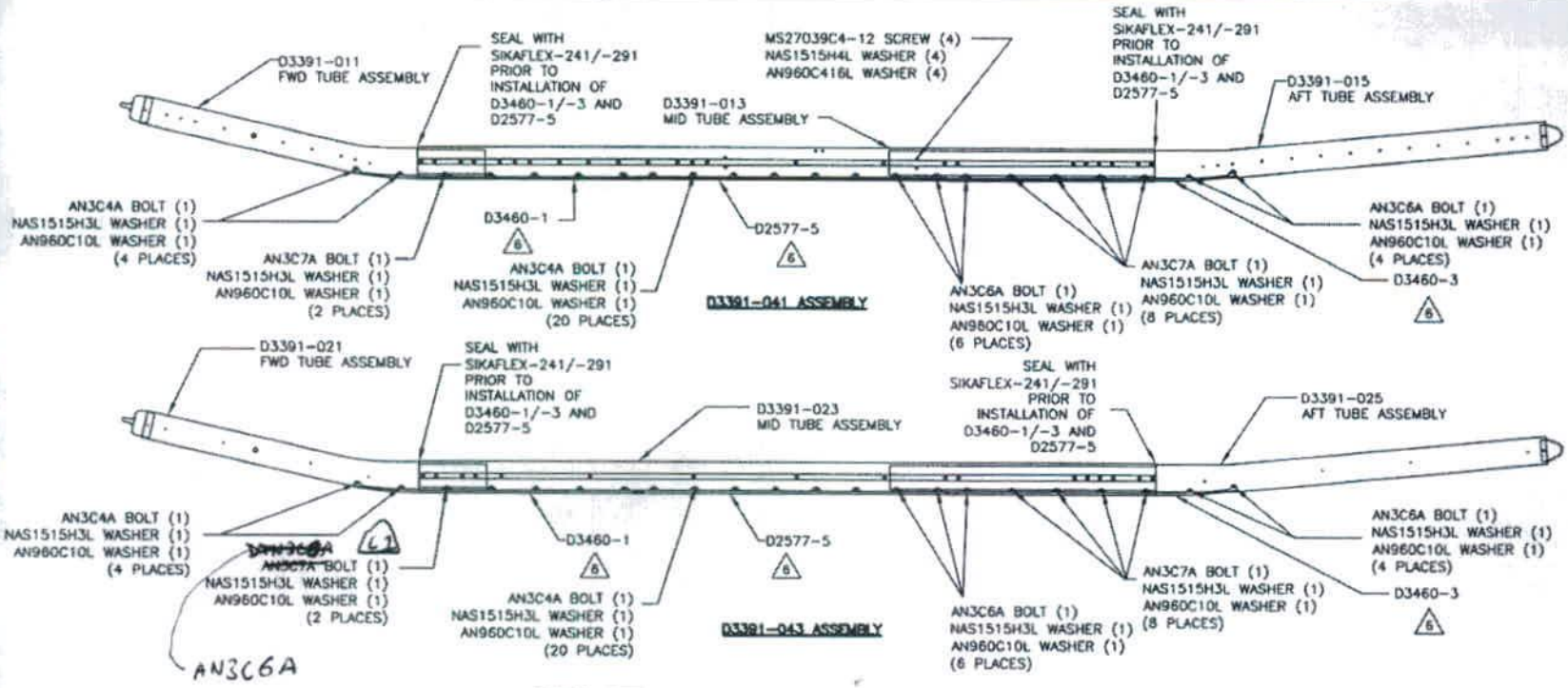


**D3391-041/-043 FLOAT SKIDTUBE ASSEMBLY PARTS LIST**

| QTY - 041 | QTY - 043 | PART NUMBER | DESCRIPTION |
|---|---|---|---|
| X | | D3391-041 | FLOAT SKIDTUBE ASSEMBLY |
| | X | D3391-043 | FLOAT SKIDTUBE ASSEMBLY |
| | | | |
| 1 | | D3391-011 | FWD TUBE ASSEMBLY |
| 1 | | D3391-013 | MID TUBE ASSEMBLY |
| 1 | | D3391-015 | AFT TUBE ASSEMBLY |
| | 1 | D3391-021 | FWD TUBE ASSEMBLY |
| | 1 | D3391-023 | MID TUBE ASSEMBLY |
| | 1 | D3391-025 | AFT TUBE ASSEMBLY |
| | | | |
| 24 | 24 | AN3C4A | BOLT |
| ~~12~~ 13 | ~~12~~ 13 | AN3C6A | BOLT |
| ~~8~~ 5 | ~~8~~ 5 | AN3C7A | BOLT |
| 44 | 44 | NAS1515H3L | WASHER |
| 44 | 44 | AN960C10L | WASHER |
| 4 | | MS27039C4-12 | SCREW |
| 4 | | NAS1515H4L | WASHER |
| 4 | | AN960C416L | WASHER |
| 1 | 1 | D2577-5 | WEARSHOE |
| 1 | 1 | D3460-1 | WEARSHOE |
| 1 | 1 | D3460-3 | WEARSHOE |

**GENERAL NOTES**

1) ALL DIMENSIONS ARE IN INCHES
2) TOLERANCES ARE PER DART QSI 018 UNLESS OTHERWISE NOTED
3) FINISH: ACID ETCH AND ALODINE PER DART QSI 005 4.1
   POWDER COAT WHITE (4.3.5.1) PER DART QSI 005 4.3
4) SPRAY INSIDE OF TUBE WITH A COAT OF LPS LABORATORIES "LPS-3" AFTER FINISH AND AFTER INSTALLATION OF INSERTS. COAT ALL EXPOSED FASTENERS WITH LPS LABORATORIES "LPS PROCYON" AFTER FINAL ASSEMBLY. CLEAN EXCESS OFF POWDER COATING WITH MEK DEGREASER.
5) USE DART DRILL TEMPLATE DT8217 TO LOCATE AND DRILL 'E' SIZE HOLES (ø0.250-ø0.256) FOR WEARSHOE INSERTS. C'SINK ø0.391/ø0.425 x 100° AS APPLICABLE AND INSTALL INSERTS EXCEPT WHERE INDICATED.
6) APPLY A LAYER OF SIKAFLEX -241/-291 ADHESIVE BETWEEN THE BOTTOM OF THE SKIDTUBE ASSEMBLY AND THE WEARPLATES

RELEASED
05.11.14

| | | | |
|---|---|---|---|
| C | 05.09.27 | LENGTHEN AFT EXTENSION | |
| B | 05.06.10 | DRAWING UPDATES | |
| A | 05.02.07 | NEW ISSUE | |

A1 C1 CHANGE BOLT LENGTH 05.11.14

COPYRIGHT © 2005 BY DART AEROSPACE USA, INC.
THIS DOCUMENT IS PRIVATE AND CONFIDENTIAL AND IS SUPPLIED ON THE EXPRESS CONDITION THAT IT IS NOT TO BE USED FOR ANY PURPOSE OR COPIED OR COMMUNICATED TO ANY OTHER PERSON WITHOUT WRITTEN PERMISSION FROM DART AEROSPACE USA, INC.

DESIGN: PH
DRAWN BY: PH
CHECKED:
APPROVED:
DATE: 05.09.27

DART — DART AEROSPACE USA, INC. PORT HADLOCK, WA

DRAWING NO. D3391
REV. C1
SHEET 1 OF 3
TITLE: 412 FLOAT SKIDTUBE
SCALE: NTS

RELEASED

05.11.14

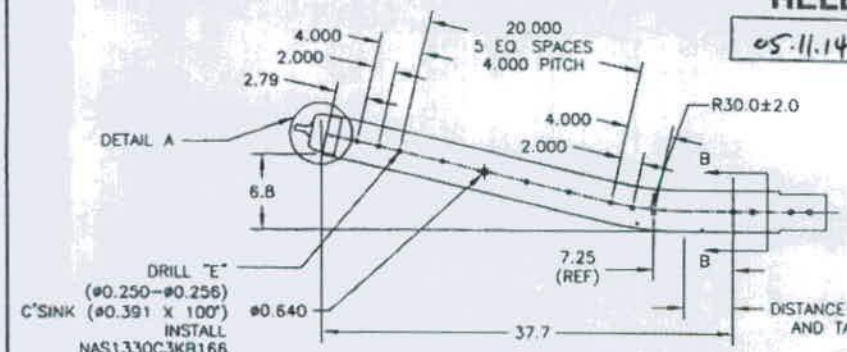


D3391–011 ASSEMBLY AND BENDING DETAIL

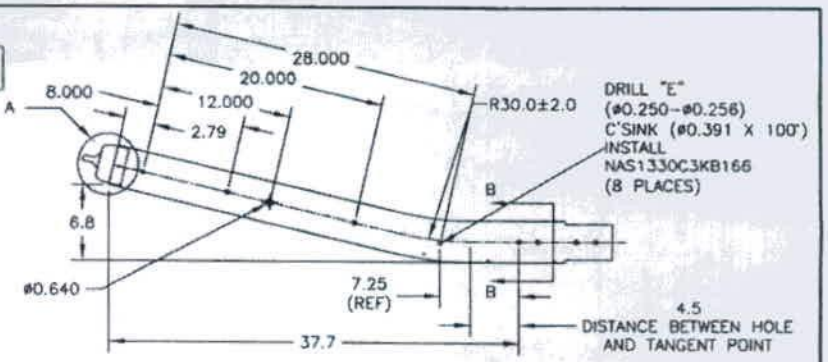


D3391–021 ASSEMBLY AND BENDING DETAIL

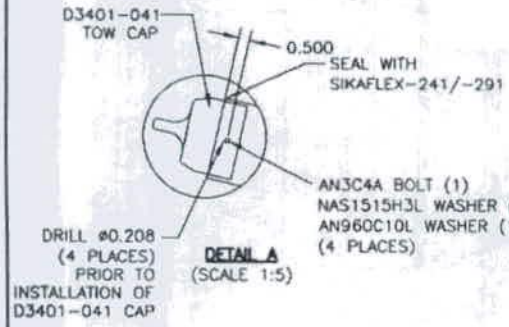


DETAIL A
(SCALE 1:5)

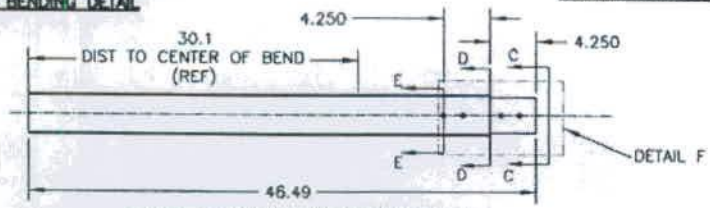


D3391–1 DRILLING AND CUTTING DETAIL
(MAKE FROM D6013–047 SKIDTUBE MATERIAL)

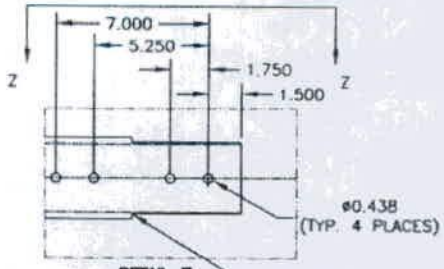


DETAIL F
(SCALE 1:5)

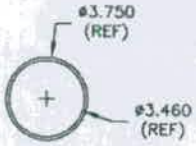


SECTION E–E
(SCALE 1:5)

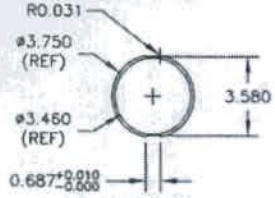


SECTION D–D
(SCALE 1:5)

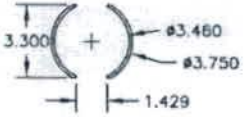


SECTION C–C
(SCALE 1:5)

SECTION B–B
(SCALE 1:5)

5 DRILL "E"
(ø0.250–ø0.256)
C'SINK (ø0.391 X 100°)
INSTALL
NAS1330C3KB166
(6 PLACES)

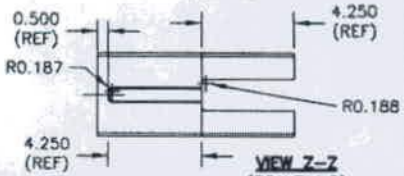


VIEW Z–Z
(SCALE 1:5)

D3391–011/–021 FWD TUBE ASSEMBLY PARTS LIST

| QTY - 011 | QTY - 021 | PART NUMBER | DESCRIPTION |
|---|---|---|---|
| X | | D3391-011 | FWD TUBE ASSEMBLY |
| | X | D3391-021 | FWD TUBE ASSEMBLY |
| | | | |
| 1 | 1 | D6013-047 | FWD TUBE |
| 1 | 1 | D3401-041 | TOW CAP |
| | | | |
| 4 | 4 | AN3C4A | BOLT |
| 4 | 4 | NAS1515H3L | WASHER |
| 4 | 4 | AN960C10L | WASHER |
| 24 | 14 | NAS1330C3KB166 | INSERT |

COPYRIGHT © 2005 BY DART AEROSPACE USA, INC.

THIS DOCUMENT IS PRIVATE AND CONFIDENTIAL AND IS SUPPLIED ON THE EXPRESS CONDITION THAT IT IS NOT TO BE USED FOR ANY PURPOSE OR COPIED OR COMMUNICATED TO ANY OTHER PERSON WITHOUT WRITTEN PERMISSION FROM DART AEROSPACE USA, INC.

| | | | |
|---|---|---|---|
| DESIGN: PH | DRAWN BY: PH | DART | DART AEROSPACE USA, INC. PORT HADLOCK, WA |
| CHECKED: | APPROVED: | DRAWING NO. D3391 | REV. C SHEET 2 OF 5 |
| DATE: 05.09.27 | | TITLE: 412 FLOAT SKIDTUBE | SCALE 1:10 |

RELEASED
05.11.14

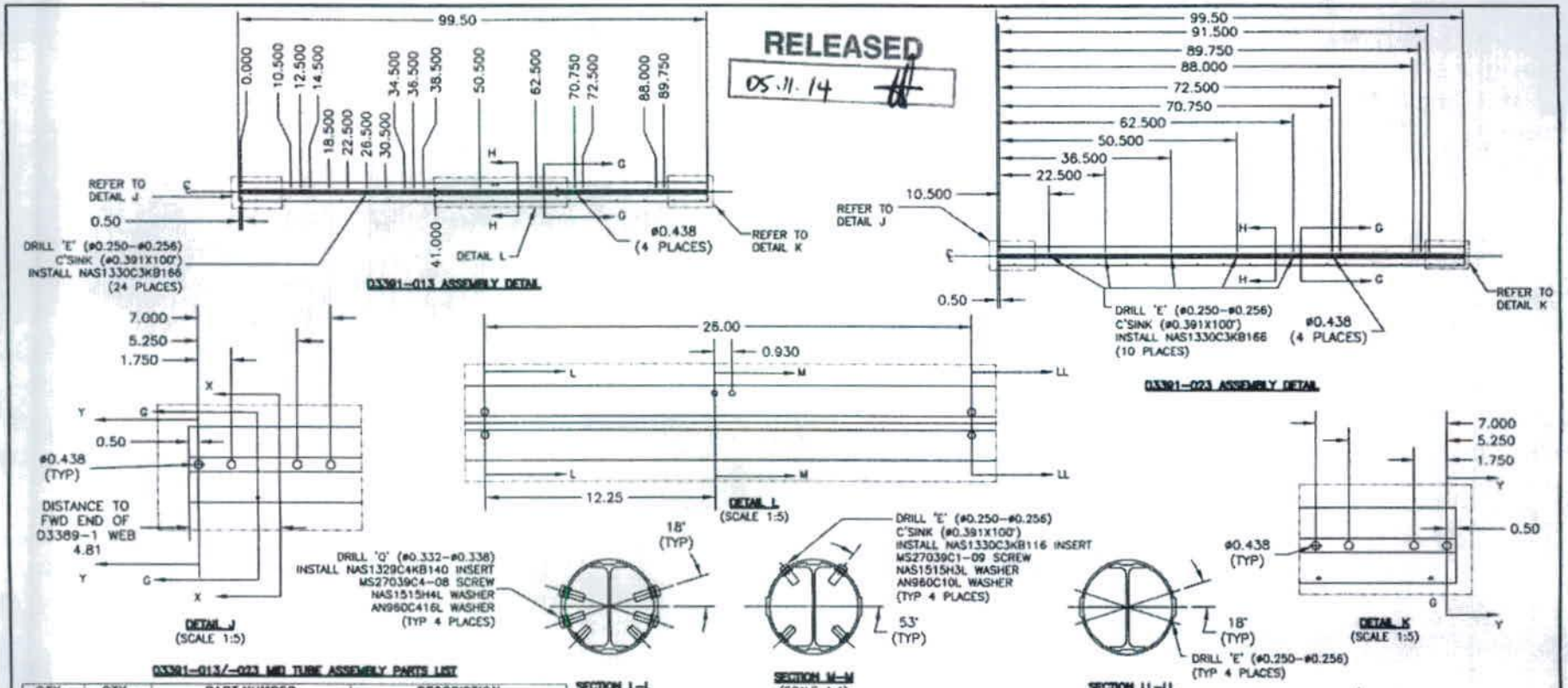


D3391-013/-023 MID TUBE ASSEMBLY PARTS LIST

| QTY - 013 | QTY - 023 | PART NUMBER | DESCRIPTION |
|---|---|---|---|
| X | | D3391-013 | MID TUBE ASSEMBLY |
| | X | D3391-023 | MID TUBE ASSEMBLY |
| 1 | 1 | D2500-1-100 | EXTRUSION |
| 1 | 1 | D3389-1 | WEB |
| 24 | 20 | NAS1330C3KB116 | INSERT |
| 24 | 10 | NAS1330C3KB166 | INSERT |
| 4 | | NAS1329C4KB140 | INSERT |
| 4 | | NAS1515H3L | WASHER |
| 4 | | AN960C10L | WASHER |
| 4 | | NAS1515H4L | WASHER |
| 4 | | AN960C416L | WASHER |
| 4 | | MS27039C1-09 | SCREW |
| 4 | | MS27039C4-08 | SCREW |

D3391-013/-023 MID TUBE ASSEMBLY
1) MATERIAL: MAKE FROM D2500-1-100 EXTRUSION
2) INSTALL D3389-1 WEB TO OUTER TUBE USING SIKAFLEX-241/-291 PER QSI 015

COPYRIGHT © 2005 BY DART AEROSPACE USA, INC.
THIS DOCUMENT IS PRIVATE AND CONFIDENTIAL AND IS SUPPLIED ON THE EXPRESS CONDITION THAT IT IS NOT TO BE USED FOR ANY PURPOSE OR COPIED OR COMMUNICATED TO ANY OTHER PERSON WITHOUT WRITTEN PERMISSION FROM DART AEROSPACE USA, INC.

| DESIGN | DRAWN BY | DART AEROSPACE USA, INC. PORT HADLOCK, WA | |
|---|---|---|---|
| PH | PH | DRAWING NO. D3391 | REV. C SHEET 3 OF 5 |
| CHECKED | APPROVED | | |
| DATE 05.09.27 | | TITLE 412 FLOAT SKIDTUBE | SCALE 1:20 |

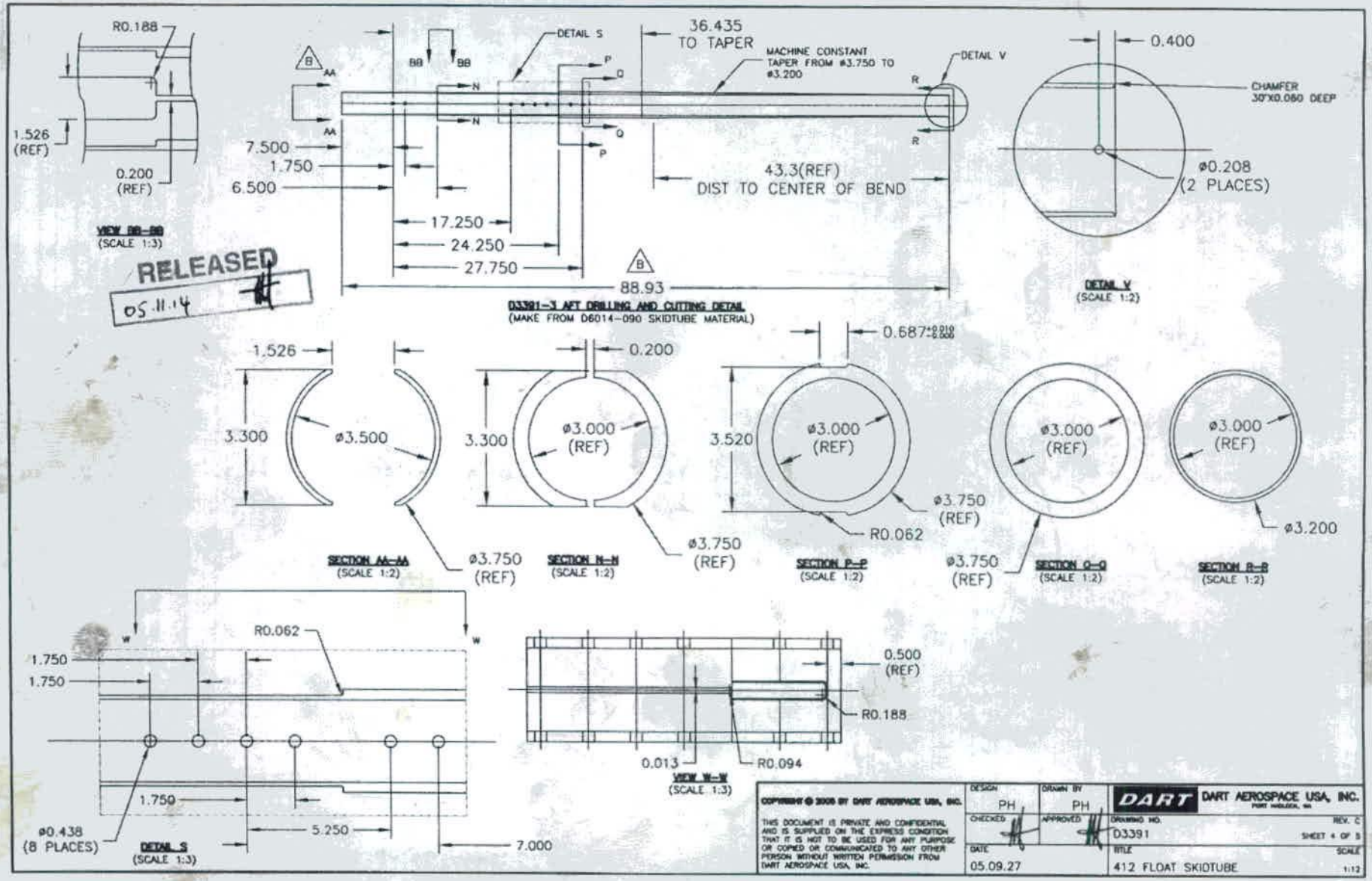


COPYRIGHT © 2005 BY DART AEROSPACE USA, INC.

THIS DOCUMENT IS PRIVATE AND CONFIDENTIAL AND IS SUPPLIED ON THE EXPRESS CONDITION THAT IT IS NOT TO BE USED FOR ANY PURPOSE OR COPIED OR COMMUNICATED TO ANY OTHER PERSON WITHOUT WRITTEN PERMISSION FROM DART AEROSPACE USA, INC.

| | | | |
|---|---|---|---|
| DESIGN: PH | DRAWN BY: PH | DART AEROSPACE USA, INC. PORT HADLOCK, WA | |
| CHECKED | APPROVED | DRAWING NO. D3391 | REV. C SHEET 4 OF 5 |
| DATE 05.09.27 | | TITLE 412 FLOAT SKIDTUBE | SCALE 1:12 |

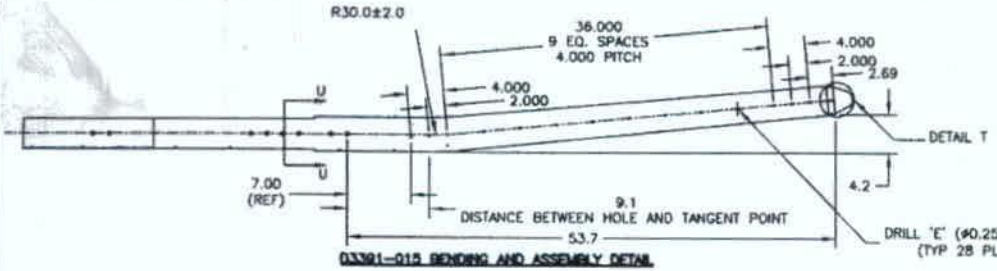


D3391–015 BENDING AND ASSEMBLY DETAIL

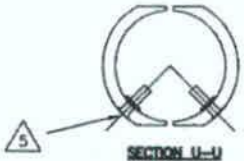


SECTION U–U
(SCALE 1:3)

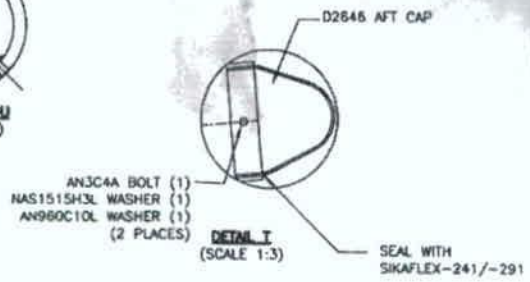


DETAIL T
(SCALE 1:3)

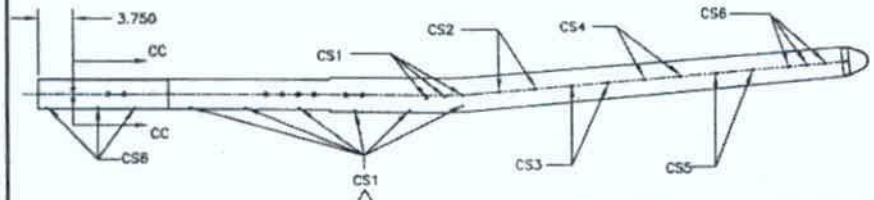


D3391–015 INSERT INSTALLATION DETAIL
(SEE TABLE)

C'SINK AND INSTALL AESS10KBXXX AND/OR NAS1330C3KBXXX IN HOLES MARKED CS1–CS6 AS FOLLOWS.

| HOLES MARKED | QTY D3391-015 | QTY D3391-025 | C'SINK | P/N |
|---|---|---|---|---|
| CS1 | 18 | 14 | ø0.425 | AESS10KB388 |
| CS2 | 4 | | ø0.391 | AESS10KB366 |
| CS3 | 4 | 2 | ø0.391 | NAS1330C3KB316 |
| CS4 | 4 | 2 | ø0.391 | NAS1330C3KB266 |
| CS5 | 4 | | ø0.391 | NAS1330C3KB216 |
| CS6 | 12 | 8 | ø0.391 | NAS1330C3KB166 |

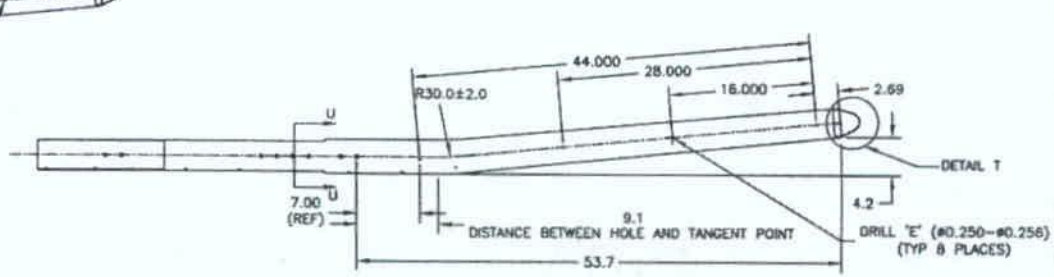


D3391–025 BENDING AND ASSEMBLY DETAIL

RELEASED
05.11.14

D3391–015/–025 AFT TUBE ASSEMBLY PARTS LIST

| QTY - 015 | QTY - 025 | PART NUMBER | DESCRIPTION |
|---|---|---|---|
| X | | D3391-015 | AFT TUBE ASSEMBLY |
| | X | D3391-025 | AFT TUBE ASSEMBLY |
| 1 | 1 | D6014-090 | AFT TUBE |
| 1 | 1 | D2646 | AFT CAP |
| 18 | 14 | AESS10KB388 | INSERT |
| 4 | 2 | NAS1330C3KB316 | INSERT |
| 4 | 2 | NAS1330C3KB266 | INSERT |
| 4 | | NAS1330C3KB216 | INSERT |
| 12 | 8 | NAS1330C3KB166 | INSERT |
| 4 | | NAS1330C4KB151 | INSERT |
| 2 | 2 | AN3C4A | BOLT |
| 2 | 2 | NAS1515H3L | WASHER |
| 2 | 2 | AN960C10L | WASHER |

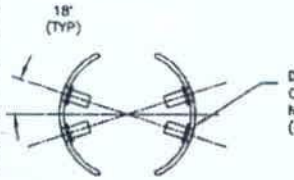


SECTION CC–CC
(SCALE 1:3)

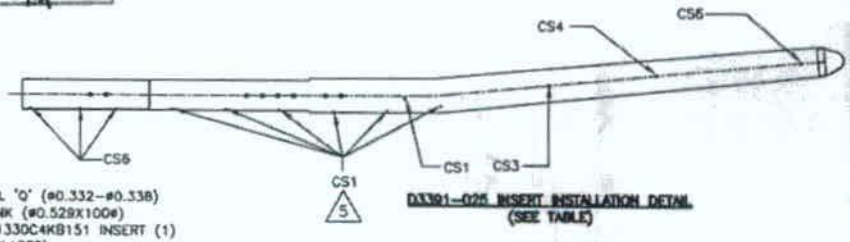


D3391–025 INSERT INSTALLATION DETAIL
(SEE TABLE)

COPYRIGHT © 2005 BY DART AEROSPACE USA, INC.
THIS DOCUMENT IS PRIVATE AND CONFIDENTIAL AND IS SUPPLIED ON THE EXPRESS CONDITION THAT IT IS NOT TO BE USED FOR ANY PURPOSE OR COPIED OR COMMUNICATED TO ANY OTHER PERSON WITHOUT WRITTEN PERMISSION FROM DART AEROSPACE USA, INC.

| DESIGN | DRAWN BY | DART AEROSPACE USA, INC. |
|---|---|---|
| PH | PH | |
| CHECKED | APPROVED | DRAWING NO. D3391 — REV. C — SHEET 5 OF 5 |
| DATE 05.09.27 | | TITLE 412 FLOAT SKIDTUBE — SCALE 1:12 |

| DART AEROSPACE LTD | Work Order: | 24 867 |
|---|---|---|
| | | |
| Description: | Part Number: | D33 91025 |
| | | |
| Inspection Dwg: D3391 Rev: B | | Page 1 of 1 |

# FIRST ARTICLE INSPECTION CHECKLIST

☐ First Article ☐ Prototype

| Drawing Dimension | Tolerance | Actual Dimension | Accept | Reject | Method of Inspection | Comments |
|---|---|---|---|---|---|---|
| 88.93 | ± 0.030 | 88.93 | ✓ | | | |
| 3.500 | ± 0.010 | 3.498 | ✓ | | | |
| 3.200 | ± 0.010 | 3.198 | ✓ | | | |
| 3.000 (Ref) | ± 0.010 | 2.990 | ✓ | | | |
| 3.750 (Ref) | ± 0.010 | 3.750 | ✓ | | | |
| 1.526 | ± .010 | 1.522 | ✓ | | | |
| .200 | " | .202 | ✓ | | | |
| R.188 | " | .188 | ✓ | | | |
| 7.500 | " | 7.500 | ✓ | | | |
| 1.750 | " | 1.750 | ✓ | | | |
| 17.250 | " | 17.250 | ✓ | | | |
| 24.250 | " | 24.250 | ✓ | | | |
| 3.300 | " | 3.300 | ✓ | | | |
| 3.520 | " | 3.520 | ✓ | | | |
| .687 | +.010 -.000 | .687 | ✓ | | | |
| R.062 | ± .010 | .062 | ✓ | | | |
| | " | | | | | |
| 5.250 | " | 5.250 | ✓ | | | |
| 7.000 | " | 7.000 | ✓ | | | |
| 0.438 | +0.006 -0.001 | 0.440 | ✓ | | | |
| ϕ.129 | +.005 -.001 | .130 | ✓ | | | Pilot for end cap |
| | | | | | | |
| | | | | | | |

| Measured by: | J. G. | Audited by: | BG | Prototype Approval: | |
|---|---|---|---|---|---|
| Date: | 05/11/30 | Date: | 05.12.04 | Date: | |

| Rev | Date | Change | Revised by | Approved |
|---|---|---|---|---|
| A | | New Issue | KJ/RF | |

## Peter Hum

**From:** David Shepherd [davids@dartaero.com]
**Sent:** Tuesday, March 28, 2006 2:52 PM
**To:** Peter Hum
**Subject:** Re: d3391-025 aft tube height

Acceptable deviation.

David

----- Original Message -----
From: "Peter Hum" <phum@dartaero.com>
To: "David Shepherd (E-mail)" <davids@dartaero.com>
Sent: Tuesday, March 28, 2006 11:15 AM
Subject: d3391-025 aft tube height

> Hi David,
>
> The D3391-025 aft tube height is measured to be 4.625. The nominal dimension
> is 4.2 +/- 0.25. Therefore the part is 0.175" out of tolerance.
>
> Is this deviation acceptable?
>
> Peter Hum
> Mechanical Designer
>
> DART Aerospace Ltd.
> Email...phum@dartaero.com
> Phone...613-632-3336
> Fax.....613-632-4443
>